99 POINT 9®

Automatic Door Handle Disinfecting System

Kills 99.9% of germs, consistently protecting customers and employees at a critical point of cross-contamination – **the door handle.**

Featured in
The New York Times & The Wall Street Journal

Contents

Constantly cleaning,
seriously safe

Company overview

Mission

99POINT9 Hygiene Limited is committed to providing creative and practical "Hygienic Solutions" to common public health and hygiene issues. We develop products that are both aesthetically pleasing and scientifically supported. The HYSO 99POINT9 is the only system for disinfecting door handles automatically that has been approved for use by the Environmental Protection Agency (EPA), killing 99.9% of germs found on door handles. 99POINT9 Hygiene Limited is dedicated to ensuring that its products are cost-effective and environmentally conscious. We reach a diverse community of institutions and establishments worldwide, including hospitals, schools, office buildings and retail stores.

History

Founded in 2020, 99POINT9 Hygiene Limited is a privately-owned company based in the UK. In April 2020, 99POINT9 Hygiene Limited acquired the HYSO D3 Micro door handle disinfecting device and associated IP. Launched in 2008, the patented device was the first product to address cross-contamination from door handles and door knobs. Although developed in 2008, public awareness of high touch objects such as door handles and door knobs and the associated risks from cross-contamination make the HYSO 99POINT9 an essential hygienic solution for today and the future.

Quality control / corporate responsibility

All of 99POINT9 Hygiene Limited manufacturing partners are ISO 9001 Certified. In conjunction with independent laboratories, all of 99POINT9 Hygiene Limited's claims are substantiated with scientific and empirical testing data.

Corporate headquarters

99POINT9 Hygiene Limited
24 Station Road, Fowey
PL23 1DF
Cornwall
United Kingdom

The 99POINT9 prevents cross-contamination from door knobs, handles and push plates.

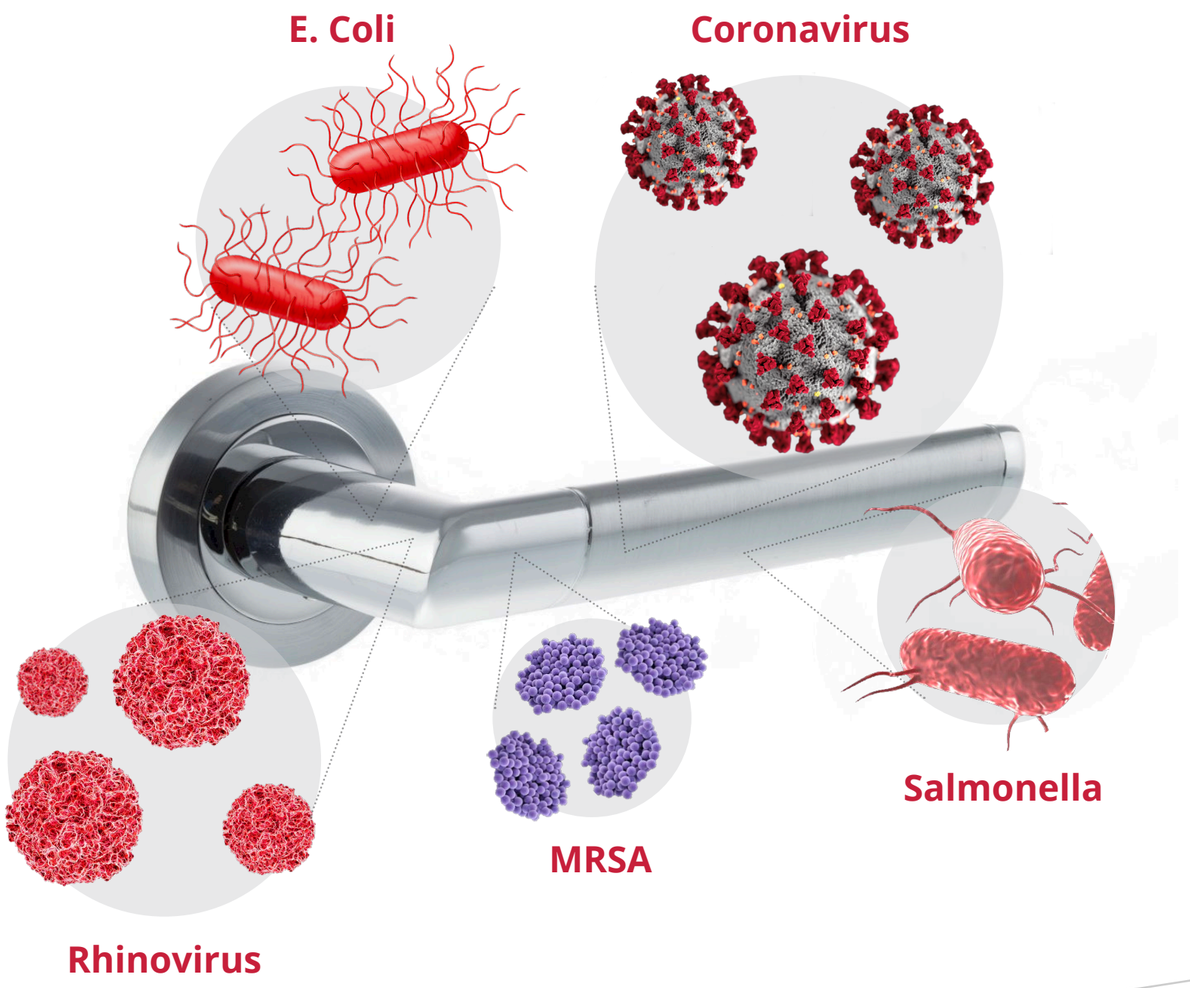

Industry recognition

BRECKENRIDGE FINANCIAL SUPPLIES

"Customer focused people delivering high quality products at the lowest possible cost."

D3 Micro*, HYSO's latest generation of its automatic door handle disinfecting devices, was touted by Modern Medicine as one of the

"Best New Products for Pediatricians."

This marks the second time that Modern Medicine has given HYSO's product such distinction, with the first generation of the device having made the list in 2007.

**The D3 Micro has been rebranded to 99POINT9*

Contemporary PEDIATRICS

The list of **"Best New Products"** is compiled by Dr. Andrew Schuman, Adjunct Assistant Professor of Pediatrics at Dartmouth Medical School and regular contributor for Contemporary Pediatrics.

Below is an excerpt from the article:

"Ideal for pediatric offices as well as the hospital environment, the [D3 Micro*] device limits the spread of infection from patient to patient, patient to staff, and staff to patient and is a terrific supplement to our current practice of frequent hand washing or using hand sanitizers."

Featured in
The New York Times & The Wall Street Journal

Increased awareness about **cross-contamination** risks has driven public demand for clean, safe, healthy and hygienic facilities.

The problem

Door handles are known to be havens for countless types of harmful bacteria, viruses and fungi, and are one of the most common contact points for human-to-human transmission of many types of germs. People can contract the common cold, flu or other diseases by inadvertently exposing themselves to unsanitized door handles.

According to the Centers for Disease Control (CDC), germs can live on surfaces such as a door handle for hours, and in some cases, even for days. Regardless of whether you keep your hands clean, it only takes one person to contaminate a door handle and put everyone else who uses that door handle at risk.

The solution

The HYSO 99POINT9 Door Handle Disinfecting System is the only automated device for disinfecting door handles to have been approved for use by the EPA. The device is a unique and cost-effective system that is simple to install, easy to maintain and consistently protects building occupants and customers at a critical point of cross-contamination – the door handle.

The HYSO 99POINT9 helps protect those who comply with normal hand hygiene standards from becoming infected by those who do not.

How does it work?

The HYSO 99POINT9 is affixed to the door twelve to fifteen inches above the door handle and works by automatically spraying a burst of Isopropanol and Quaternary Ammonium compound-based formula, effectively disinfecting the door handle, and killing 99.9% of germs.

The frequency of the spray intervals can be selected from three different time settings in order to ensure that each door is receiving the disinfectant at the optimal level. Other features of the device include an LCD screen that indicates the refill status and battery life, as well as a proximity sensor that prevents the device from accidentally spraying someone's hands.

Tests have shown that there are significantly fewer bacteria on a HYSO 99POINT9 treated door handle than on an untreated door handle. Tests have also shown that there are significantly fewer bacteria on the hands of individuals who have touched a HYSO 99POINT9 treated door handle than on those who have not.*

*See our swab test data on page 19

LCD screen - indicates refill status and battery life.

Choose from 3 spray intervals - spray every 15, 30 or 60 minutes.

Proximity sensor - prevents hands from being sprayed.

Product fact sheet

Works with your existing door hardware.

The 99POINT9 has been developed to disinfect door handles, knobs and push plates in venues ranging from health care, food processing and restaurants, to commercial office buildings, educational establishments, athletic establishments, hotels and government facilities. It can be used on just about any door that may be a critical point of cross-contamination in your establishment.

Easy to install & maintain.

The device mounts in minutes with no tools required. Refill canisters can be replaced in seconds and are fully recyclable.

Programmable to meet your needs.

With the flick of a couple of switches, the device can be set to meet your facility's needs based on traffic flow and facility hours.

99POINT9's proprietary hospital-grade formula disinfects the entire door handle.

The 99POINT9 disinfectant is Isopropanol and Quaternary Ammonium -based. Whereas the Isopropanol kills upon contact and evaporates quickly, the Quaternary Ammonium compound (Quat) is non-volatile and food safe, and does not evaporate from the surface, providing an extended contact kill time and residual efficacy.

The Quat leaves an invisible residue on the handle's surface – just enough that when you turn the handle, the formulation is distributed around the entire handle surface, providing a barrier to bacterial, viral and fungal growth.

Extensive swab data analysis has proven the Quat formula provides full coverage of the entire door handle, top to bottom, side to side.*

*See our swab test data on page 19

Precision engineered solenoid valve technology.

The HYSO 99POINT9 solenoid valve ensures a precise dosage with every spray – a cost-effective application of what is in the can.

Liquid Crystal Display (LCD).

Makes it crystal clear when it is time to replace the 3 AA batteries or the 99POINT9 disinfecting formula canister.

Ambient light sensor saves battery & canister life.

The 99POINT9 can be set to power down whenever your lights are switched off.

Proximity sensors

The integrated proximity sensors ensure the 99POINT9 sprays the handle, not the hand.

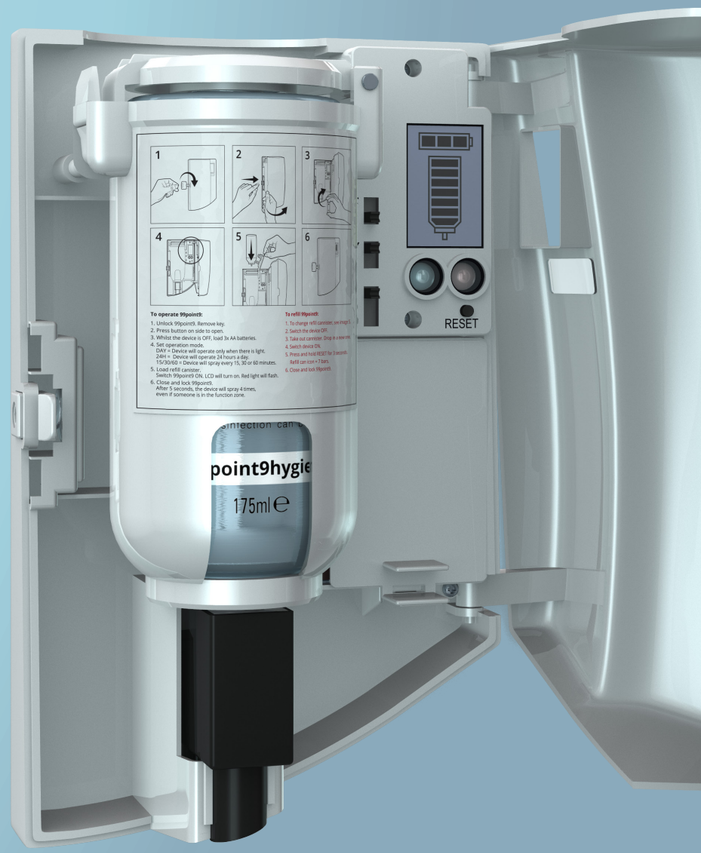

FAQs

What's in the can?

The HYSO 99POINT9 formula immediately disinfects the surface of the handle with a Quaternary Ammonium-based formulation, a non-volatile anti-microbial agent which continues to work on the surface after it has dried. The formula dries in seconds, and because the agent does not evaporate from the surface, it provides an extended contact kill time. With regular spraying, the device will maintain an exceptionally high level of continual disinfection on the door handle surface.

What are "Quats"?

Quaternary ammonium salts or compounds are more commonly known as "Quats." They have many useful functions (e.g. killing bacteria) and are found in things we use every day, from hard surface disinfectants to laundry products, and from shampoos to spermicidal jellies.

But I already use hand sanitizer?

Any purely alcohol-based disinfectant, like hand sanitizer, is effective only for as long as it is wet. It kills the germs on your hands, but stops working as soon as the residue dries, at which point bacteria can start growing again. Furthermore, other types of microbes, such as MRSA, are resilient to alcohol alone or take longer to kill, which is precisely why HYSO 99POINT9 formulas also contain Quats.

What are the benefits of using Quat?

The Quat remains on the handle, killing bacteria even after the alcohol has dried. The Quat works for longer than the alcohol and continues to reduce bacteria between sprays, inhibiting bacterial re-growth when a dirty hand opens the door. The more the handle is sprayed, the more ongoing protection there is – all without damaging your hands, the door handle or the door.

Is the formula approved?

HYSO 99POINT9 formulas are manufactured according to European Union (EU) regulations as a disinfectant that actually destroys 99.9% of certain bacteria and other germs. The EU formula is fully compliant with the Global Biocidal Products Directive, a standard that a significant number of developed and third world countries have adopted, and has been tested and approved by an EU registered toxicologist regarding safety to human health.

What about the underside of the handle?

The Quat leaves a very slight residue on the handle's surface – just enough that when you turn the handle, the formulation gets spread around, even underneath. The more the handle is sprayed and touched, the more effective HYSO 99POINT9 becomes (provided, of course, that the handle is not touched with something that is so "physically" dirty that it needs to be wiped off). Studies conducted for and approved by the EPA demonstrate that the action of the hand spreads the anti-microbial material to the underside of the handle.

The Quat formulas provide full coverage of the entire door handle, top to bottom, side to side.

99.9 POINT®

Why now?

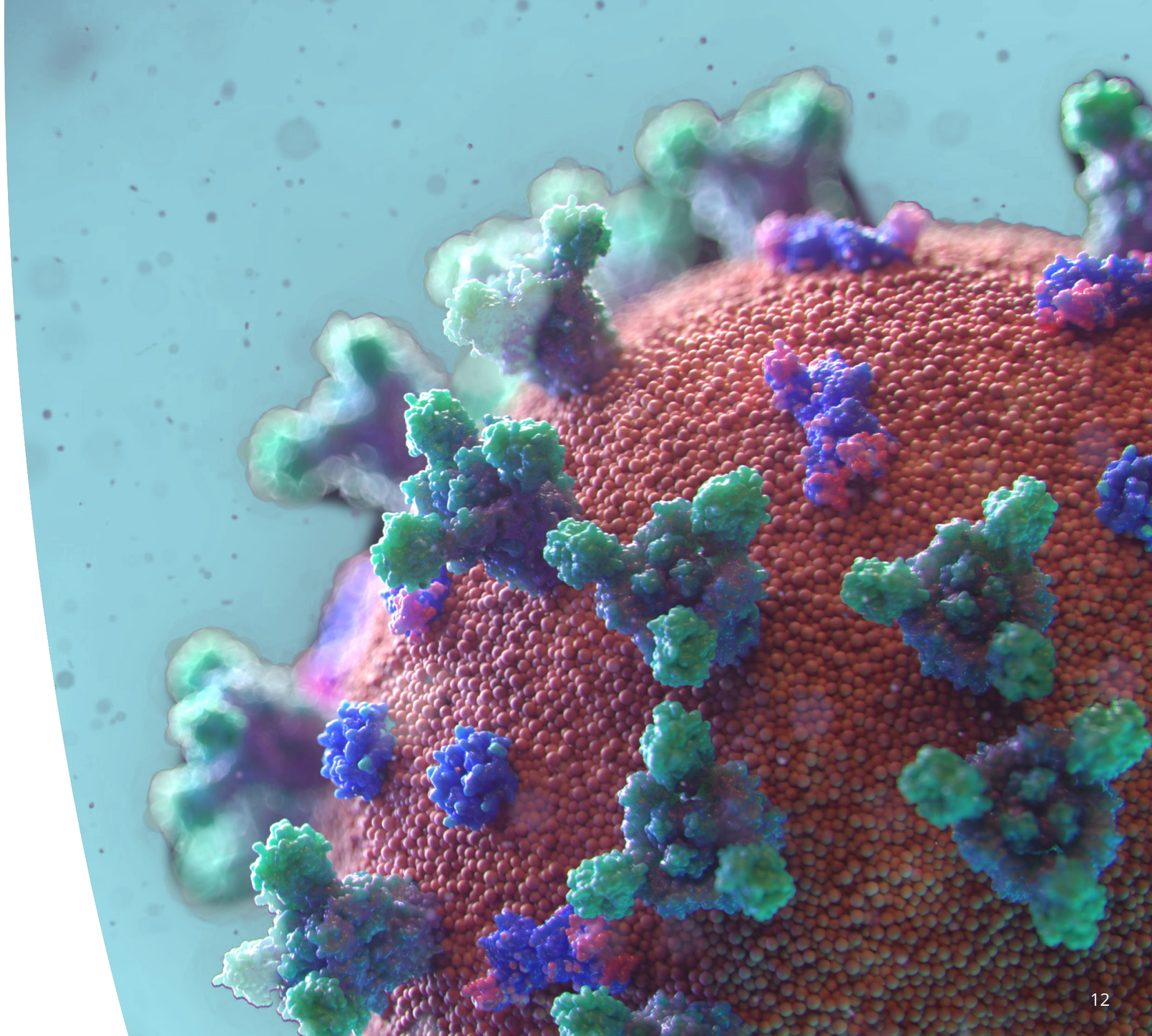

Common bacteria, germs and pathogens

You can spread these germs to others by touching them or by touching surfaces that they also touch, such as doorknobs.

- According to the Centers for Disease Control (CDC), germs can live on surfaces such as a door handle for hours, and in some cases, for as long as three days.
- Regardless of whether or not you keep your hands clean, it only takes one person to contaminate a door handle and put everyone else who uses that door handle at risk.
- Every time you touch an unsanitized door handle, you are exposing yourself to countless types of harmful bacteria, germs and pathogens.
- The HYSO 99POINT9 ensures that those who comply with normal hand hygiene standards are not infected by those who do not.
- Tests have shown that there are significantly fewer bacteria on both a HYSO 99POINT9 treated door handle and on the hands of individuals who have touched a HYSO 99POINT9 treated door handle than on those who have not.*

Cultures from untreated door handles

Location / Bacterium	TVC	Coliforms	E. Coli	Staph.	Pseudomonas
Ladies Public Washroom	1,224,000	5,600	1,800	14,600	25,600
Fast Food Restaurant Washroom	86,400	300	160	5,920	1,040
Supermarket Washroom	819,000	2,240	1,940	5,720	54,600
Children's Nursery Front Exit Door	43,200	2,960	2,500	1,360	<10
Doctor's Surgery Patient Washroom	14,240	Not measured	370	640	Not measured

Above chart: *A swab test was taken from the door handle at five random locations, showing which bacteria were present and in what counts. The first column shows the total amount of bacterial colonies counted.*

The more bacteria present on the door handle, the more likely someone could become infected.

The goal of disinfection is to achieve near sterilization of all bacteria. This suggests that all bacteria need to be eradicated to prevent infection.

**White Paper is presented at the end of this deck.*

Influenza A, A2 and H1N1 (Swine Flu)

How organizations can protect their employees

For most employers, protecting their employees will depend on emphasizing proper hygiene (disinfecting hands and surfaces) and practicing social distancing.

How Influenza can spread between people

Human influenza can be spread by touching objects contaminated with influenza viruses and then transferring the infected material from the hands to the nose, mouth or eyes.

Reducing Influenza in the workplace using the 99POINT9

Keep work surfaces, telephones, computer equipment and other frequently touched surfaces such as door knobs, handles, levers and push plates clean. The HYSO 99POINT9 has been proven effective in eliminating Influenza.

Norovirus

Transmission

Noroviruses are highly contagious and as few as 10 viral particles may be sufficient to infect an individual. Furthermore, any Norovirus penetration of a facility has a strong person-to-person element as well as high potential for surface cross-contamination.

Prevention

Norovirus is difficult to contain by traditional temperature control and other food safety interventions. Therefore, the most important means of preventing Norovirus transmission and infection is through exercising frequently and appropriate hand washing.

Over 50% of all foodborne disease outbreaks are caused by Norovirus. It causes Acute Gastroenteritis in 23 million cases every year.

Salmonella

Transmission

Salmonella is usually transmitted to humans by eating foods contaminated with animal feces. Food may also become contaminated by the hands of an infected food handler who did not wash hands with soap after using the bathroom.

Prevention

- Wash produce thoroughly
- Avoid cross-contamination of foods
- Wash hands before handling food, and between different food items

The HYSO 99POINT9 formula has been proven effective in eliminating Salmonella from door handles thereby preventing cross-contamination.

More than 40,000 cases of salmonella are reported yearly in the U.S. Salmonella can cause typhoid fever, paratyphoid fever and salmonellosis.

MRSA

For any facility type, the Centers for Disease Control (CDC) recommends routinely disinfecting frequently touched surfaces.

How to eliminate MRSA:

Healthcare facilities

In addition to cleaning, disinfection of the bedside equipment and environmental surfaces (e.g., bed rails, bedside tables, carts, commodes, doorknobs, and faucet handles) is indicated.

Schools

Cleaning and disinfecting surfaces that may have come in contact with the MRSA bacteria is necessary to keep the environment healthy. Hard surfaces and equipment such as floors, light switches, door handles, hand-rails, tables, and desks should be cleaned routinely.

Correctional facilities

Strictly enforcing environmental disinfection of patient rooms, with a focus on environmental surfaces exposed to frequent hand contact (i.e. bed rails and doorknobs).

MRSA kills 1 in 20 hospital patients who become infected.

Swab test data

Microbiological swab testing results

Introduction

Currently we are in the grips of the Covid-19 pandemic which is having a devastating impact on our daily lives. In recent times we have seen a massive increase in the number of serious and ever fatal infections caused by 'super bugs'. Add this to the general infections caused by poor hygiene, and the result is a lot of sickness that could be avoided by improving sanitization regimes across the board.

Most responsible organizations have a thorough cleaning protocol, but one area found to be lacking in most instances is the exit door handle from toilets and washrooms. Even if the handle is cleaned periodically through out the day, it is impossible to keep bacterial contamination down to a low level as it only takes one very dirty hand to deposit soil that can be transferred to the next person and the next and so on.

This is where the 99POINT9 becomes invaluable. The HYSO 99POINT9 works by spraying the handle as frequently as every fifteen minutes. It instantly sanitizes the upper surface of the handle with its Isopropanol and Quaternary Ammonium-based formulation and deposits a residual anti-microbial agent which continues to work on the surface after it has dried. As the handle is used, the action of the hand will actually spread this material to the underside of the handle where the spray cannot reach thus perpetuating the process to the whole surface.

The efficacy of the HYSO 99POINT9 formulation has been well established by carrying out a number of suspension tests to specified EU standards which allow the relevant antibacterial claims to be made.

However, at HYSO we wanted to observe the effects of the formulation when used in 'real life situations'. Several locations were tested. Each chosen for its potential challenge for the HYSO 99POINT9 system. The test parameters were varied according to the location and related footfall. Individual details concerning each location are listed along with the results. The swabs taken covered the whole surface of the door handle. Initially however we wanted to address the question as to what bacterial levels actually existed on exit door handles in typical places one might visit during the course of the day, and what the implications of these results might be.

The table on the following page details the swab counts from 5 such locations.

Prepared by Joy Wood, Bsc. (Hons)
Developmental Chemist

Pre-treatment swab data

Location / Bacterium	TVC	Coliforms	E. Coli	Staph.	Pseudomonas
Ladies Public Washroom	1,224,000	5,600	1,800	14,600	25,600
Fast Food Restaurant Washroom	86,400	300	160	5,920	1,040
Supermarket Washroom	819,000	2,240	1,940	5,720	54,600
Children's Nursery Front Exit Door	43,200	2,960	2,500	1,360	<10
Doctor's Surgery Patient Washroom	14,240	Not measured	370	640	Not measured

Above chart: *A swab test was taken from the door handle at five random locations, showing which bacteria were present and in what counts. The first column shows the total amount of bacterial colonies counted.*

The more bacteria present on the door handle, the more likely someone could become infected.

The goal of disinfection is to achieve near sterilization of all bacteria. This suggests that all bacteria need to be eradicated to prevent infection.

**White Paper is presented at the end of this deck.*

Conclusion

- Whilst the public washroom showed the highest bacterial count, the number of Coliforms and E.Coli were less than expected for such an environment.
- The supermarket washroom levels were as expected.
- The fast food restaurant showed low levels of Coliforms and E.Coli which is what one would hope to find in a food outlet.
- The nursery exit doors were of concern again in respect to Coliform and E.Coli. It was felt that at these levels there would be concern over the risk of infection to children.
- The initial TVC at the doctors surgery was lower than on all the other sites, but the presence and level of E.Coli and Staphylococcus confirms that this environment is also susceptible to the likelihood of cross-contamination, resulting in additional ill health.
- Although these locations will have some sort of cleaning regime, it is clear that further improvement could be made by ensuring that exit door handles are subject to their own sanitization procedure.

Treatment test 1: Golf club

Sample Description	TVC	% Reduction from T_0
Male locker room - Time 0	10,720	-
Male locker room - First spray +2 minutes	<10	>99.9
Male locker room - 30 minutes spray +2 minutes	8,000	25.28
Male locker room - 45 minutes spray +2 minutes	<10	99.9
Ladies locker room - Time 0	6,640	-
Ladies locker room - First spray +2 minutes	<10	99.9
Ladies locker room - 30 minutes spray +2 minutes	80	98.8
Ladies locker room - 45 minutes spray +2 minutes	90	98.64
Second ladies locker room exit door - untreated	108,000	-

Test date: October 12th 2007

Location assessment: Clean and well maintained on a daily basis. Heavy but sporadic footfall. Recommendation to set units to spray at 15 minute intervals located inside the exit door leading from the ladies and gentlemen's locker room.

Out of interest, a swab was taken from the second ladies exit door which opens directly onto the fairway as it was considered likely that people would slip in and out through this door without returning to the bathroom area to wash their hands.

Conclusion

The results on handles in both locations show a significant reduction in bacterial colonies in every incident except for the male 30 minute spray, where the very high count may be due to a heavy deposit of soiling on the handle at that time. The result immediately following, however, shows conclusively that further spraying almost totally eliminates the bacterial colonies.

Treatment test 2: Garage

Sample Description	TVC	% Reduction from T_0
Gentlemen's washroom exit door $Time_0$ - untreated	3,720	-
Inital spray +2 minutes	2,080	44.08
15 minutes spray +2minutes	50	98.66
15 minutes spray +17 minutes	<10	99.73
15 minutes spray +32 minutes	<10	99.73

Test date: November 6th 2007

Location assessment: This testing was carried out on the exit door handle from the gentlemen's washroom. It was situated in a very dirty environment with visible dirt on the door handle. In this study, spraying was ceased after 15 minutes to observe the residual efficacy of the formulation.

Conclusion

The effect of heavy soiling on a handle, where one spray application of the 99POINT9 is not enough to effectively reduce the bacterial colonies was clearly seen. However, the test also proved that a second spray quickly and significantly reduced the colony numbers and then, in spite of the handle being used 3 times for the remaining duration of the test, the level fell below 10 cfu and remained at that level.

Treatment test 3: Factory

Sample Description	TVC	% Reduction from T_0
Ladies washroom $time_0$ - untreated	107,200	-
Ladies washroom - First spray +2 minutes	<100	99.9
Ladies washroom - 15 minutes spray +2 minutes	<100	99.9
Ladies washroom - 45 minutes spray +2 minutes	<100	99.9
Ladies washroom - 120 minutes spray +2 minutes	<100	99.9
Gentlemen's washroom $time_0$ - untreated	88,000	-
Gentlemen's washroom - handle cleaned with HYSO	1,300	98.52
Gentlemen's washroom - 15 minutes spray +2 minutes	500	99.43
Gentlemen's washroom - 45 minutes spray +2 minutes	300	99.66
Gentlemen's washroom - 120 minutes spray +2 minutes	<100	99.89

Test date: December 5th 2007

Location assessment: Although not visibly as dirty as, for example, the garage environment, this presented a consistently heavy used set of washrooms where it was believed that no sanitization procedure existed for the exit door handles in question. Here it was decided to pre-clean one handle with HYSO before commencing, but leave the other handle to see how it affected the bacterial count.

Conclusion

Rather surprisingly, whilst cleaning the gentlemen's washroom door handle did significantly reduce the bacterial count, it did not reduce as quickly as the ladies that started off higher, but reduced right down after one spray and not being cleaned. Perhaps this was because more layers of bacteria had built up on the handle and it took longer to get the maximum reduction. Overall, the test demonstrated yet again that the HYSO 99POINT9 will reduce the amount of bacteria on a door handle by a very significant amount.

Treatment test 4: Doctor's surgery

Sample Description	E.Coli	Staph.	TVC	% Reduction from T_0
Patient washroom - untreated	370	640	14,240	-
Patient washroom - First spray +2 minutes	50	80	9,940	30.2
Patient washroom - 1 5 minutes spray +2 minutes	<10	<20	20	99.9
Patient washroom - 45 minutes spray +2 minutes	<10	<20	<10	99.9
Patient washroom - 120 minutes spray +2 minutes	<10	<20	<10	99.9

Test date: May 10th 2008

Location assessment: The test took place in the patients toilet situated within a busy doctor's surgery, where it is believed that cleaning takes place at least once a day and then as required.

Conclusion

Once again we see that the HYSO 99POINT9 formulation immediately begins to reduce the level of bacteria, and by 15 minutes the levels have been reduced to a minimum that is then maintained throughout the duration of the test.

The overall conclusion for the use of the HYSO 99POINT9 has to be that using this system will significantly reduce the amount of bacteria present on a door handle and importantly, when challenged, the formulation is quickly able to recover a reduced level position if the handle is continually sprayed. These factors will help to reduce the spread of infection through touch.

Absenteeism

Absenteeism costs money

- Industry experts have estimated that the true cost of absenteeism to employers is 1.75-2.5 times a sick employee's daily salary.
- Being sick on the job increases the likelihood of spreading the germs or disease to coworkers and customers.
- Employees coming to work sick costs the U.S. economy $180 billion annually in lost productivity.
- On average, this costs employers somewhere between $255 and $789 per employee, per year.

Example industry / Job type	Avg. Hourly salary	Avg. Daily salary	Avg. Daily absenteeism cost to employer (using 1.75 multiplier)	Avg. Daily absenteeism cost to employer (using 2.5 multiplier)
Health care (Non-supervisory workers)	$18.73	$149.4	$262.22	$374.60
Grocery stores (Butchers and meat cutters)	$13.38	$107.04	$187.32	$267.60
Arts, entertainment and recreation (janitors and cleaners)	$9.58	$76.64	$134.12	$191.60
Food manufacturing (Non-supervisory workers)	$13.13	$105.04	$183.82	$262.60

The HYSO 99POINT9 is a cost-effective solution.

The cost of one HYSO 99POINT9 plus one year's supply of refill cans is less than the average cost to employers of just one employee sick day.

Absenteeism

Potential cost avoidance opportunities

- Fewer sick days/ lower rates of absenteeism and presenteeism.
- Savings on overtime pay (for employees filling in for sick/absent employees).
- Savings on custodial labor costs (industry estimates show that 90% of the cost of cleaning is labor).
- Savings on employee retraining and workplace disruption costs.
- Fewer civil liability damages/ lower litigation expenses.
- Less wear and tear on the facilities (e.g. kicking the restroom door open to avoid touching the handle).

Qualitative benefits

- Improved productivity and occupant wellness.
- Higher employee morale.
- Cleaner and more hygienic work environment.
- Shows that a commitment to health and safety is part of the company's culture.
- Promotes customer satisfaction and loyalty.

Presenteeism

Sick people come to work

- Approximately 50% of all workers in the private sector do not receive any paid sick time.
- Given the current economic environment, many workers feel pressured to come to work if sick for fear of losing their job.

What does this mean?

- Being sick on the job decreases productivity and increases the chance of workplace injury.
- More importantly, it also increases the likelihood of spreading the germs or disease to coworkers and customers.

The result

- Employees coming to work sick costs the U.S. economy $180 billion annually in lost productivity.
- On average, this costs employers somewhere between $255 and $789 per employee, per year.[3]

Employers need to take greater precautions to prevent cross-contamination.

Locations

The HYSO 99POINT9 can and should be used on any door where maintaining a clean handle is important.

This is especially true of high-contact doors where cross-contamination would present a health or financial risk.

Typical facilities

Common locations include:

- Healthcare facilities such as hospitals, dentist's, nursing & retirement homes etc
- Hospitality venues such as restaurants, hotels, clubs, corporate venues
- Educational facilities like nurseries, day cares, schools and colleges/ universities
- Entertainment centers such as cinemas, theaters, arenas, sporting venues, museums, casinos etc
- Food services and supermarkets
- Office buildings
- Athletic facilities
- Travel facilities such trains and airports
- Outdoor washroom facilities in public parks and municipalities
- Prisons and Correctional Facilities
- Government Facilities
- Banks
- Veterinarian Facilities

Potential installation locations within these facilities:

- Restrooms/ washrooms
- Laboratories
- Conference & board rooms
- Building entrances & exits
- Food service & commercial kitchens
- Break rooms & waiting rooms
- Office pantries, cafeterias, examining rooms
- Commercial refigerators
- Hallways

Hospitals

Restaurants

Locker rooms

Teacher staffrooms

Waiting areas

Experts estimate that there are over 2.5 million facilitiesin the U.S alone that are potential HYSO 99POINT9 Hygiene customers.

End user benefits

Dependable, economical & effective

The HYSO 99POINT9 Door Handle Disinfecting Device kills more than 99.9% of illness and disease-causing bacteria and viruses found on door handles.

Unlike other products that focus on getting your hands clean, the HYSO 99POINT9 is the only product that focuses on keeping them sanitized.

HYSO 99POINT9 is easy to install and disinfects all types of door handles automatically, providing dependable, economical and effective levels of hygiene 24/7.

Direct savings

- Less paper towel usage
- Reduced time cost of janitor cleaning door handle

Qualitative benefits

- Improved productivity and occupant wellness
- Higher employee morale
- Cleaner and more hygienic work environment
- Shows that a commitment to health and safety is part of the company's culture
- Promotes customer satisfaction and loyalty

Appearance / aesthetics

- The sleek design blends in to maintain a professional atmosphere

The device was the first to address cross-contamination from door handles and door knobs. Although developed in 2008, public awareness of high touch objects and the associated risks make the HYSO 99POINT9 an essential hygienic solution for today and the future.

The clean washroom experience begins and ends with the door handle.

The HYSO 99POINT9 completes the automated, clean experience in the away-from-home washroom category by addressing a critical point of cross-contamination – the door handle.

Expensive and labour intensive disinfecting is no longer necessary.

The clean washroom experience begins and ends with the door handle.

Restrooms have become more automated in response to the public demand for greater convenience, safer waste disposal and an improved hygienic environment. Automation reduces the spread of infection caused by unclean hands.

However, a 2007 observational study sponsored by the American Society for Microbiology found that only 75% of men and 77% of women actually washed their hands in public restrooms. And beyond simply "rinsing hands off," a University of Arizona professor of microbiology noted in his own study that of those that do wash their hands in public restrooms, only 33% use soap and only 16% wash their hands long enough.

Without the HYSO 99POINT9, every hygienic precaution you take in the restroom becomes completely negated the second you touch the door handle to exit.

"Bathroom door handles are a huge potential source of disease-causing organisms. People who wash their hands risk infection after touching the door handle. The HYSO 99POINT9 has been shown to reduce or eliminate this risk. Use of the HYSO 99POINT9 in conjunction with hand washing will result in a decrease of disease transmission."

Marc Wilkenfeld, M.D.
Assistant Professor of Clinical Medicine at Columbia University Medical Center-Occupational Medicine Consultant to the Department of Environmental Health and Safety

Cost-effective

Goal: Reduce the risk of cross-contamination in your facility by regularly cleaning and disinfecting the door handles.

Fact: Achieving a clean or disinfected facility is directly related to the frequency of the cleanings.
Industry estimates show that 90% of the cost of cleaning is labor.

Option 1

Disinfect your door handles with the fully automated 99POINT9

Spray freq. (mins)	Hours facility open: 8	12	24
15	$0.40	$0.60	$1.20
30	$0.20	$0.30	$0.60
60	$0.10	$0.15	$0.30

Cost per day of HYSO 99POINT9 formula

Spray freq. (mins)	Hours facility open: 8	12	24
15	$146	$219	$438
30	$73	$110	$219
60	$37	$55	$110

Cost per year (365 days) of HYSO 99POINT9 formula

Option 2:

Have a janitor clean your door handle regularly throughout the day

Mins per cleaning[2]	x	Cleanings per day[3]	=	Total mins per day	=	Total hours per year	x	Minimum wage	=	Total cost per year[4]	or	Total cost per day
1		24		24		146		$7.25/h		$1,059		$2.90
3		24		72		438		$7.25/h		$3,176		$8.70
5		24		120		730		$7.25/h		$5,293		$14.50

Summary

To disinfect a door handle twice an hour during a 12-hour workday with the 99POINT9 will cost approximately $110 per year. On the other hand, even using very conservative assumptions, to have a janitor clean a door handle as frequently would cost between $1,059 and $5,293 per year in labor costs alone.

Conclusion

The HYSO 99POINT9 requires virtually no labor or upkeep and is a cost-effective solution to addressing the door handle cross-contamination problem. By installing the HYSO 99POINT9, your cleaning staff will be able to dedicate their scarce time to other priorities throughout the day.

Unit specifications and features

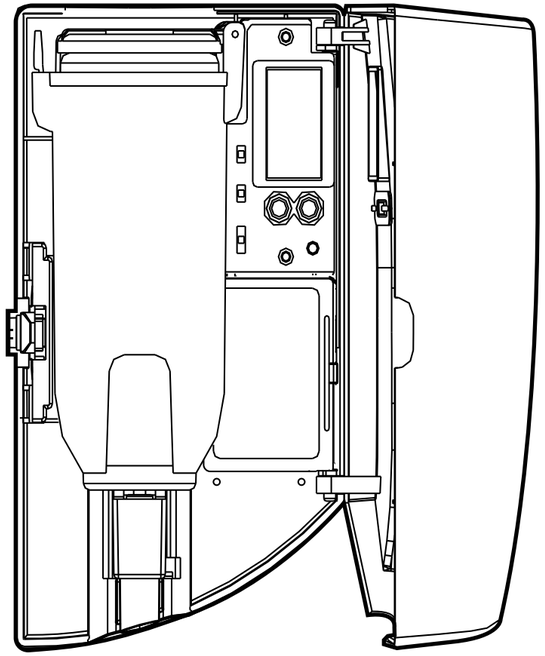

Installation

1. Drill 2 screws into the door with the fixings provided. Use the template on this sheet so that the bottom of the device is approximately 12 inches (30cm) from the top of the handle.
2. Hang the micro on both screws. Make sure it fits firmly. Tighten or loosen screws if needed.

   or...
3. Use the double-sided tape on the back of the device. Make sure the surface of the door is clean and dry. Remove protective strips from the tape, mount the 99POINT9 into the right position and press firmly on the door.
4. It's not necessary to use both tape and screws.

Set up your HYSO 99POINT9

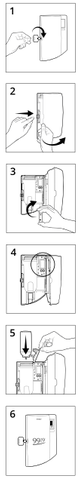

1. Unlock the 99POINT9 and remove the key.
2. Press the button on the side to open.
3. Set ON/OFF switch (a) to OFF. Load x3 AA batteries.
4. Set operation mode.
   DAY/24H (b):
   DAY* = Device will operate only when there is light.
   24H = Device will operate 24 hours a day.`

   **The 99POINT9 has a light sensor (e). This is only active when 99POINT9 = DAY*

   15 / 30 / 60 (c):
   99POINT9 will spray every 15, 30 or 60 minutes.
5. Load refill canister. Perform test spray.
   Open the lid of the can housing. Press the latch and lift the lid. Drop in a new canister and close the lid until you hear it 'click'.

   Set ON/OFF switch (a) to ON. LCD will light up and the red light (f) will flash for 1 second.
6. Close front cover and lock the 99POINT9. Remove the key and keep it safe.
   After 5 seconds, the device will spray once, even if someone is in the function zone *(see motion sensor for more information).*

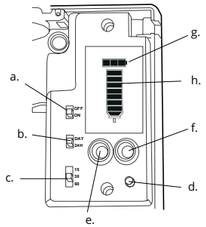

Motion Sensor

The 99POINT9 has a motion sensor to prevent it from accidentally spraying someone's hand. If a person is in the function zone when the device is due to spray, a red light (f) will flash. 99POINT9 will not spray until 5 seconds after the function zone is clear. This 5-second cycle will continue until the device detects that the function zone has been clear for 5 seconds; then it will spray.

LCD

The LCD shows battery life and refill can status.

Battery Indicator (g):

Battery power enough to operate 99POINT9 correctly = 3 bars.

Batteries need replacing soon = 2 bars, then 1 bar.

When empty battery outline flashes BATTERIES MUST BE REPLACED IMMEDIATELY. The device may still spray, but there will not be enough power to spray enough formula on the door handle to kill bacteria effectively.

When new batteries installed = 3 bars.

Refill Can status (h):

Full can of formula (min. 800 sprays) = 7 bars. After every 100 sprays, one bar will disappear. When only 100 sprays are left in the can and the can icon is empty, the can outline flashes. After 50 more sprays, the can outline still flashes, but the red light (f) will now also flash and will continue flashing until a new can is installed and the system is reset by pressing and holding the RESET button (d) for 3 seconds.

Troubleshooting

If the 99POINT9 is not spraying, please check the following:

Is the refill canister empty?

To change the canister:

1. Set ON/OFF switch to (a) to OFF
2. Open the can housing lid. Press the latch and lift the lid
3. Drop in a new canister
4. Change timer settings (b,c) if you wish
5. Set ON/OFF switch (a) to ON
6. Press and hold the RESET button (d) for 3 seconds. Refill can icon (h) = 7 bars
7. Close and lock the device

Do the batteries need replacing?

If the empty battery outline is flashing, THE BATTERIES MUST BE REPLACED IMMEDIATELY. Make sure to use 3 new, good quality batteries for best system efficiency and battery life.

Can I perform a test spray?

You can perform a test spray at any time. Press RESET (d) for one second. 99POINT9 will spray once, even if someone is in the function zone. Additional installation information for surface disinfection for users in the USA.

Suggested places for use of the HYSO Automatic Door Disinfecting System: Public restroom exit doors, hospital patient room door, school classroom doors, spa doors, theatre doors, kitchen doors, daycare facility doors.

Additional installation instructions:

Install the HYSO 99POINT9 6 - 12 inches above the door knob/handle/ lever and choose the interval time of 15, 30 or 60 minutes between sprays. The device will spray a light mist of an EPA registered disinfecting formula that will cover the accessible area of the surface. The quick drying formula will disinfect the wetted surface in 10 minutes. Each aerosol will continue to release disinfectant for 7- 30 days depending on the interval setting.

Optimal installation tips:

Install the HYSO 99POINT9 6 - 12 inches above a high touch surface (door handle/knob/ lever). To properly disinfect, the 99POINT9 Automatic Door Disinfecting System should be centred such that the surface is thoroughly wetted by the released disinfectant aerosol. Only the wet area contacted by the disinfectant aerosol will be disinfected.

The device can be manually set to spray at intervals of either 15, 30 or 60 minutes. The interval time is determined by the traffic in the location where the 99POINT9 is installed. Depending on the surface (style of the door handle/ knob/ lever), place the device in a position where the handle will receive the maximum amount of wetness. The spray is released in a conical pattern and the device must be positioned correctly to achieve the most coverage. Once the position has been determined, affix the dispenser to the door with either the mounting tape or screws provided.

See installation and the template attached.

Additional claims:

The 99POINT9 disinfectant formula is a hospital disinfectant that has been shown to be effective against the following bacteria: Staphylococcus Aureus, Salmonella Enterica, Pseudomonas Aeruginosa, Methicillin Resistant Staphylococcus Aureus (MRSA). It is also effective against the following viruses: Rhinovirus, Influenza, A_2, Norovirus, Feline Calicivirus, and Fungus: T. Mentagrophytes (Athlete's Foot Fungus).

The disinfectant formula has been shown to kill 99.9% of these important bacteria, viruses and fungu.

- 7.40"(h) x 4.37"(w) x 2.64" (d)
- Available in several colours in order to complement existing door hardware
- Easily mounts with either 2 screws or industrial-strength double-sided tape (both included)
- 3 Year Limited Warranty

Refill canister & battery life

Refill canister life

NOTE: Approx. 800 sprays per can

Spray Frequency	Hours in use (per day)	Minimum can life
15 minutes	8	25 days
	12	17 days
	24	8 days
30 minutes	8	50 days
	12	34 days
	24	17 days
60 minutes	8	100 days
	12	68 days
	24	34 days

Battery life

NOTE: Approx. 8,000 sprays per set of 3 AA batteries

Spray Frequency	Hours in use (per day)	Minimum can life
15 minutes	8	8 months
	12	6 months
	24	3 months
30 minutes	8	1.5 years
	12	1 year
	24	6 months
60 minutes	8	3 years
	12	2 years
	24	1 year

Signage

Supporting signage helps customer and employee understanding of the HYSO 99POINT9 message.

The goal is to educate employees and customers as to why the HYSO 99POINT9 is on the door.

In the media

The New York Times

"Simon Sassoon saw the future"

THE WALL STREET JOURNAL. WSJ

SPECTRUM NEWS NY MINUTE

FOX TV STATIONS
FOX TELEVISION STATIONS, INC.

CBS

PBS

The patent

The patent

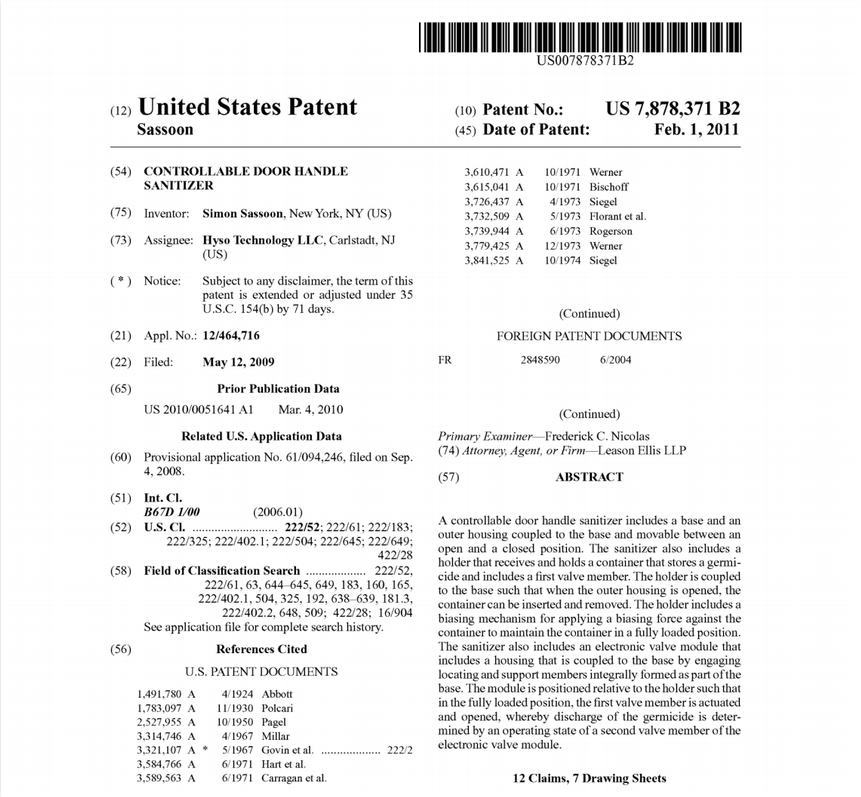

US007878371B2

(12) **United States Patent**
Sassoon

(10) **Patent No.: US 7,878,371 B2**
(45) **Date of Patent: Feb. 1, 2011**

(54) **CONTROLLABLE DOOR HANDLE SANITIZER**

(75) Inventor: **Simon Sassoon**, New York, NY (US)

(73) Assignee: **Hyso Technology LLC**, Carlstadt, NJ (US)

(*) Notice: Subject to any disclaimer, the term of this patent is extended or adjusted under 35 U.S.C. 154(b) by 71 days.

(21) Appl. No.: **12/464,716**

(22) Filed: **May 12, 2009**

(65) **Prior Publication Data**

US 2010/0051641 A1 Mar. 4, 2010

Related U.S. Application Data

(60) Provisional application No. 61/094,246, filed on Sep. 4, 2008.

(51) **Int. Cl.**
B67D 1/00 (2006.01)

(52) **U.S. Cl.** **222/52**; 222/61; 222/183; 222/325; 222/402.1; 222/504; 222/645; 222/649; 422/28

(58) **Field of Classification Search** 222/52, 222/61, 63, 644–645, 649, 183, 160, 165, 222/402.1, 504, 325, 192, 638–639, 181.3, 222/402.2, 648, 509; 422/28; 16/904
See application file for complete search history.

(56) **References Cited**

U.S. PATENT DOCUMENTS

1,491,780	A	4/1924	Abbott	
1,783,097	A	11/1930	Polcari	
2,527,955	A	10/1950	Pagel	
3,314,746	A	4/1967	Millar	
3,321,107	A *	5/1967	Govin et al.	222/2
3,584,766	A	6/1971	Hart et al.	
3,589,563	A	6/1971	Carragan et al.	
3,610,471	A	10/1971	Werner	
3,615,041	A	10/1971	Bischoff	
3,726,437	A	4/1973	Siegel	
3,732,509	A	5/1973	Florant et al.	
3,739,944	A	6/1973	Rogerson	
3,779,425	A	12/1973	Werner	
3,841,525	A	10/1974	Siegel	

(Continued)

FOREIGN PATENT DOCUMENTS

FR	2848590	6/2004

(Continued)

Primary Examiner—Frederick C. Nicolas
(74) *Attorney, Agent, or Firm*—Leason Ellis LLP

(57) **ABSTRACT**

A controllable door handle sanitizer includes a base and an outer housing coupled to the base and movable between an open and a closed position. The sanitizer also includes a holder that receives and holds a container that stores a germicide and includes a first valve member. The holder is coupled to the base such that when the outer housing is opened, the container can be inserted and removed. The holder includes a biasing mechanism for applying a biasing force against the container to maintain the container in a fully loaded position. The sanitizer also includes an electronic valve module that includes a housing that is coupled to the base by engaging locating and support members integrally formed as part of the base. The module is positioned relative to the holder such that in the fully loaded position, the first valve member is actuated and opened, whereby discharge of the germicide is determined by an operating state of a second valve member of the electronic valve module.

12 Claims, 7 Drawing Sheets

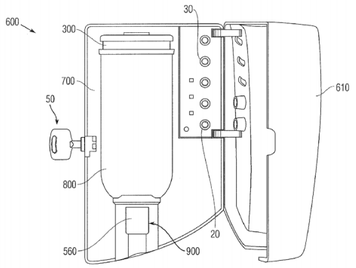

Fig. 6

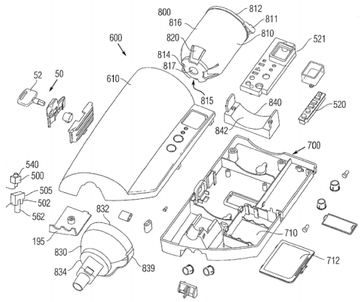

Fig. 7

Medical advisory board

HYSO's Medical Advisory Board, comprising of three leading specialists in Employee Healthcare, Microbiology and Infectious Disease and Environmental Health, was appointed in 2007 to advise the company on scientific matters and procedures and to ensure that its products and systems are highly effective and safe.

Marc Wilkenfeld, M.D.
Assistant Professor of Clinical Medicine at Columbia University Medical Center-Occupational Medicine Consultant to the Department of Environmental Health and Safety

Dr. Wilkenfeld has written and lectured extensively on a variety of topics in environmental and occupational medicine, including air pollution, health promotion in the workplace, asbestos exposure, occupational lung and liver disease and tight building syndrome. Since September 11, 2001, Dr. Wilkenfeld has advised local elected officials, community groups, and companies in lower Manhattan on health risks and proper cleanup procedures. Wilkenfeld is the author of three book chapters on environmental and occupational medicine, focusing on simple asphyxiants, indoor air concerns, and metal compounds. He is also a consultant to a number of New York-based companies, where he performs epidemiological medical investigations and develops medical training, education, surveillance and promotional programs.

Stephen S. Morse, PhD.
Professor of Clinical Epidemiology & Founding Director of the Center for Public Health Preparedness, Mailman School of Public Health of Columbia University

Dr. Morse's interests focus on epidemiology of infectious diseases and improving disease early warning systems. In 2000, he returned to Columbia after four years in government as Program Manager for Biodefense at the Defense Advanced Research Projects Agency (DARPA), Department of Defense, where he co- directed the Pathogen Countermeasures program and subsequently directed the Advanced Diagnostics program. His book, Emerging Viruses (Oxford University Press), was selected by "American Scientist" for its list of "100 Top Science Books of the 20th Century." Dr. Morse was chair and principal organizer of the 1989 NIAID/NIH (National Institutes of Health) Conference on Emerging Viruses and more recently was the founding chair of ProMED (the nonprofit international Program to Monitor Emerging Diseases). He currently serves on the Steering Committee of the Institute of Medicine's Forum on Microbial Threats, and the National Academy of Sciences' Committee on Future Biowarfare Threats.

William J. Schneider, MD (deceased August 11, 2016)
Dr.Schneider was a Phi Beta Kappa graduate of Tufts University and earned his M.D. and MPH from Columbia University. He was medical director and Managing Director for Healthcare

Services at JP Morgan Chase from which he retired in 2001. Dr. Schneider's second career was in employee health services at Memorial Sloan Kettering Cancer Center. He was a valued colleague and wise mentor and enthusiastic clinical professor, instructing countless medical students, residents, and other healthcare professionals over the years through his academic appointments at Albert Einstein College of Medicine, Weill Cornell Medical College and Mount Sinai School of Medicine. Dr. Schneider wrote many articles and book chapters on occupational medicine, health promotion and infectious disease. As a nationally recognized leader in these areas he was a frequent presenter at professional conferences around the country. He was a valued member of the HYSO 99POINT9 Medical Advisory Board.

White paper

August 2008

White Paper concerning HYSO LLC's Automatic Door Handle Disinfecting System

Introduction

The transmission of infectious diseases by hand contact is a well-recognized fact, with potentially severe consequences everywhere, especially in health care facilities and in food services. The prolonged hospitalizations and needless deaths that can occur as a consequence of infectious diseases in health care settings have attracted wide-spread attention. This concern is increased by the emergence of organisms that are resistant to current antibiotic and antiviral treatment. The need to find a solution to this serious problem is critical. The importance of "hand hygiene" (clean hands) in preventing the spread of infection is well established.

Key Conclusions

- Reducing the pathogen burden on door handles can distinctly reduce a potential source of disease transmission.
- This is of particular importance in the health care and food service industries.
- HYSO is a practicable innovation that diminishes the bacterial burden on door handles and may reduce disease transmission regardless of the compliance / behavior of employees or other bathroom users. Information provided by the manufacturer of the disinfectant dispensed by the HYSO device indicates that it is also effective in reducing the concentration of such pathogenic viruses as the Norwalk agent, influenza and rhinoviruses.
- The use of the HYSO Automatic Door Handle Disinfecting System will set new standards for the responsible reduction of cross-contamination from the use of soiled door handles.

***

One need only read the signs in restaurant restrooms emphasizing the importance of hand-washing for employees, or observe the intense campaigns conducted by almost every health care facility to reduce hospital-acquired infections by assiduous attention to hand hygiene for doctors, nurses, and others, to recognize that all of us carry germs on our hands. This is an acknowledged fact. Perhaps less well appreciated, albeit suspect AND established by scientific reports, is that not all of us wash our hands after using public lavatories. The logical extension of these findings is that handling the doorknobs of restrooms can contaminate hands that we have already cleansed, and put us all at risk. Not only are restroom door handles potentially contaminated, but any door knob can be germ-laden, perhaps from someone who just covered a cough or sneeze with their hand or used a handkerchief.

In the USA, the Centers for Disease Control and local health departments have long noted the risks associated with unwashed hands following bathroom use. The CDC recommends hand washing (usually the entire hand for a minimum of 30 seconds) in order to reduce this risk. Local health departments, (including those in New York City) have public health laws mandating employee hand washing after bathroom use with penalties for non-compliance. OSHA is beginning to oversee this critical area and is preparing Federal statutes for hand washing in the food related industry.

There are obviously many strategies that can be employed to lessen that risk, and although education may increase hand washing compliance, a significant percentage of people simply do not comply, leaving other individuals open to the transmission of potentially harmful organisms. In addition, studies have shown that pathogens from unwashed hands in bathrooms survive for significant periods of time on surfaces such as door handles, and may cross-contaminate even washed hands. Until now there were limited solutions, such as handleless doors, or gingerly turning the door handle while holding a paper towel or using one's own clothing to prevent skin contacting the surface of the door handle.

One recent development holds the promise of significantly reducing this risk with minimal personal intervention or attention. The HYSO automatic door handle disinfecting system periodically sprays a mist of an effective disinfectant on door handles, minimizing the concentration of bacteria on those handles. This

Full copies of the data behind the statements made in this paper are available from HYSO LLC upon request.

August 2008

has been demonstrated in on-site tests conducted at an independent laboratory in company-sponsored studies. These studies also showed that the very use of a HYSO equipped door handle caused the disinfectant to cover the entire surface. There was also a residual impact of the disinfectant over time. The product is EPA and FDA approved. We welcome additional studies to further substantiate these observations and to confirm an anticipated reduction in disease transmission.

Conclusion

In summary, hands carry germs, and the spread of disease through hand contamination is of great concern. It is impossible to rely on the behavior of others to limit our own risk, but the HYSO automatic door handle disinfecting system_provides a new passive methodology with the potential of minimizing the risk of this cross-contamination from surfaces such as door handles. Microbiological studies have demonstrated the utility and efficacy of the HYSO system in diminishing bacterial and viral contamination of door knobs, door handles and push plates.

Additional studies confirming this observation and extending it to a reduction in disease transmission are anticipated and welcomed.

***

A Note about the Authors

The authors of this White Paper form the Medical Advisory Board of HYSO LLC. They were appointed in 2007 to advise the company on scientific matters and procedures to ensure that HYSO's products and systems are highly effective and safe. The MAB members are:

Marc Wilkenfeld M.D., Assistant Professor of Clinical Medicine at Columbia University Medical Center, and Occupational Medicine Consultant to the Department of Environmental Health and Safety. Dr. Wilkenfeld has written and lectured extensively on a variety of topics in environmental and occupational medicine, including air pollution, health promotion in the workplace, asbestos exposure, occupational lung and liver disease, and tight building syndrome. Since Sept. 11, Dr. Wilkenfeld has advised local elected officials, community groups, and companies in lower Manhattan on health risks and proper cleanup procedures. Dr. Wilkenfeld is the author of three publications on environmental and occupational medicine, focusing on simple asphyxiants, indoor air concerns, and metal compounds. He is also a consultant to a number of New York City-based companies, where he performs epidemiological medical investigations and develops medical training, education, surveillance, and promotional programs.

Stephen S. Morse Ph.D. ., Professor of Clinical Epidemiology & Founding Director of the Center for Public Health Preparedness, Mailman School of Public Health of Columbia University. Dr. Morse's interests focus on epidemiology of infectious diseases, and improving disease early warning systems. In 2000, he returned to Columbia after 4 years in government as Program Manager for Biodefense at the Defense Advanced Research Projects Agency (DARPA), Department of Defense, where he co-directed the Pathogen Countermeasures program and subsequently directed the Advanced Diagnostics program. Before going to Columbia, he was assistant professor of Virology at The Rockefeller University in New York, and remains an adjunct faculty member. His book, Emerging Viruses (Oxford University Press) was selected by "American Scientist" for its list of "100 Top Science Books of the 20th Century". Dr. Morse was chair and principal organizer of the 1989 NIAID/NIH (National Institutes of Health) Conference on Emerging Viruses, for which he originated the term and concept of emerging viruses/infections; served as a member of the Institute of Medicine/National Academy of Sciences' Committee on Emerging Microbial Threats to Health (and chaired its Task Force on Viruses), and was a contributor to its report, Emerging Infections (1992). He currently serves on the Steering Committee of the Institute of Medicine's Forum on Microbial Threats, and the National Academy of Sciences' Committee on Future Biowarfare Threats; and has served as an adviser to numerous government and international organizations. He was the founding chair of ProMED (the nonprofit international Program to Monitor Emerging Diseases) and was one of the originators of ProMED-mail, an international network inaugurated by ProMED in 1994 for outbreak reporting and disease monitoring using the Internet.

William J. Schneider, M.D. Associate Clinical Member, Memorial Sloan-Kettering Cancer Center, NY; Associate Attending Physician; Employee Health Service Physician; Memorial Hospital for Cancer & Allied Diseases, NY; Dr. Schneider is an internist with subspecialty training in infectious diseases. He has been on the faculties of the New York University School of Medicine and the Albert Einstein College of Medicine, among other institutions, most recently as Associate Clinical Professor of Medicine and Epidemiology at Einstein. Past hospital affiliations have been with Bellevue Hospital, Montefiore Hospital in the Bronx, where he served as the Assistant Director of the Department of Medicine, and Mount Sinai Hospital in New York City. His other area of interest is in occupational medicine, having served as the Director of Health Services for JP Morgan for 21 years, and Speaker of the House of Delegates of the American College of Occupational and Environmental Medicine. He is currently Chairman of the Occupational Medicine Residency Advisory Committee at Mount Sinai. He is a fellow or member of a number of medical and scientific societies, and has spoken and published on a diversity of medical topics.

(Note: Institutional affiliations are listed for identification purposes only.)

Full copies of the data behind the statements made in this paper are available from HYSO LLC upon request.

Testimonials

CASTLE PROPERTIES
600 RUSSELL ST. SUITE 185 STARKVILLE, MS 39759
662-244-7099 Office

June 30, 2020

Mr. Sassoon,

I wish to offer my positive feedback about our experience with your Hyso 99POINT9 door handle disinfecting device.

We are a commercial development and management firm and constantly research ways to lessen our projects' environmental impact and create a healthy environment for our project users. We must accomplish these goals while keeping costs and operating expenses in line with the market. This approach offers us tangible advantages to attracting and retaining high quality tenants and users.

In 2013, we began a project that included the historic renovation of a former cotton mill into office space and a conference center, plus a hotel and parking garage. In our desire to lessen its environmental impact and reduce janitorial expenses, we wanted to eliminate paper towels in our restrooms. We specified Dyson Airblade hand dryers but were faced with the challenge of how people would open the restroom door to exit without the use of a paper towel. We then located the 99POINT9 door handle disinfecting device. Upon completion in 2015, we first installed the 99POINT9 on all restroom doors in the office space and conference center restrooms.

Subsequently, we added them to other heavy traffic doors in this facility and our hotels. We mounted them on veneer, paint, and laminate finish doors. In the five years of use we found no adverse impact on the finishes of the doors or hardware.

The users of our project often comment positively on the 99POINT9 and often thank us for including them. I believe using the 99POINT9 in our properties clearly showed *we care about the user*, not just in speech but in action.

As noted above, to have a product that is cost-effective, easy-to-maintain, consumer-friendly, easily scalable in our buildings, which promotes hygiene and causes zero wear and tear on fixtures and fittings – is to be applauded. It has also materially influenced attracting and retaining tenants and users – which is also good for business.

Thank you again

Sincerely,

Mark Castleberry, President

Castle Properties, LLC

Mark Castleberry,
President - Castle Properties, LLC

June 30th 2020

Testimonials

Tom Bern
General Manager - American Mortgage Specialist - Chandler, AZ

"We had to address the issue of people getting sick from cross-contamination. Since HYSO has been installed there is a noticeable difference. I would recommend it for any company or any organization."

Fabian Navarro
Desk Manager - American Mortgage Specialist - Chandler, AZ

"When one person got sick everyone got sick. Since HYSO has been installed the sickness level has definitely gone down."

Marc Wilkenfeld, M.D.
Assistant Professor of Clinical Medicine at Columbia University Medical Center-Occupational Medicine Consultant to the Department of Environmental Health and Safety

"Spread of infectious disease often occurs when an individual's hand contacts a germ contaminated surface. The best defense against disease transmission is hand washing. Unfortunately studies have shown that a large percentage of people do not wash their hands after a visit to the bathroom. Bathroom door handles are a huge potential source of disease causing organisms. People who wash their hands risk infection after touching the door handle. HYSO has been shown to reduce or eliminate this risk. Use of HYSO in conjunction with hand washing will result in adecrease of disease transmission."

Alisa Katz, FNP, APRN-B
Director, Employee Health Service New York Methodist Hospital

"In light of the recent emergence of new diseases, such as the "superbug", and other bacteria and viruses, hand hygiene is the most effective way to spread of infection. In the case of an unwashed hand touching a handle, to ensure safety, HYSO is a unique unit that does the job!"

Stephen S. Morse, M.D.
Director of the Center for Public Health Preparedness at the Mailman School of Public Health of Columbia University and a faculty member in the Epidemiology Department

"Keeping your hands clean is one of the best ways to protect yourself against disease. But many people don't wash their hands when they should. That's why we all look at that bathroom doorknob with suspicion. HYSO reassures you, it's safe."

Andrew J. Schuman, M.D.
Contemporary Pediatrics, Jan 1 2008

"Every so often an idea or product comes along that makes one say "Now why didn't I think of that?" The HYSO Hygienic Solutions has one such product, which has the potential to significantly reduce the transmission of disease in the medical environment."

Chris Firth
General Services Manager at Portsmouth Grammar School, United Kingdom

"Our school prides itself on its high standards throughout the school and I'm always looking for ways to improve the health and safety of our students, staff and parents. When I saw the article in "Cleaning Matters" I thought that this product could provide an extra level of protection for everyone. Then there was the fatal MRSA outbreak in some schools in America: I felt that anything we could do at PGS to reduce this risk, however small, would be a positive thing."

Safety data sheet

SAFETY DATA SHEET
99point9 HYSO Aerosol Refill

SECTION 1: Identification of the substance/mixture and of the company/undertaking

1.1. Product identifier

Product name 99point9 HYSO Aerosol Refill

1.2. Relevant identified uses of the substance or mixture and uses advised against

Identified uses Disinfectant.

1.3. Details of the supplier of the safety data sheet

Supplier 99point9 Hygiene Limited
C/O Elm Financial Solutions Ltd
Speedwell Mill
Old Coach Road
Tansley
Matlock
DE4 5FY

1.4. Emergency telephone number

National emergency telephone number UK Consumers - NHS 111. Medical Professionals - www.toxbase.org

SECTION 2: Hazards identification

2.1. Classification of the substance or mixture

Classification (EC 1272/2008)

Physical hazards Aerosol 1 - H222, H229

Health hazards Eye Irrit. 2 - H319 STOT SE 3 - H336

Environmental hazards Aquatic Chronic 3 - H412

2.2. Label elements

Hazard pictograms

Signal word Danger

Hazard statements
H222 Extremely flammable aerosol.
H229 Pressurised container: may burst if heated.
H319 Causes serious eye irritation.
H336 May cause drowsiness or dizziness.
H412 Harmful to aquatic life with long lasting effects.

99point9 HYSO Aerosol Refill

Precautionary statements
P210 Keep away from heat, hot surfaces, sparks, open flames and other ignition sources. No smoking.
P211 Do not spray on an open flame or other ignition source.
P251 Do not pierce or burn, even after use.
P261 Avoid breathing spray.
P264 Wash contaminated skin thoroughly after handling.
P271 Use only outdoors or in a well-ventilated area.
P273 Avoid release to the environment.
P280 Wear protective gloves/ protective clothing/ eye protection/ face protection.
P304+P340 IF INHALED: Remove person to fresh air and keep comfortable for breathing.
P305+P351+P338 IF IN EYES: Rinse cautiously with water for several minutes. Remove contact lenses, if present and easy to do. Continue rinsing.
P312 Call a POISON CENTRE/doctor if you feel unwell.
P337+P313 If eye irritation persists: Get medical advice/ attention.
P403+P233 Store in a well-ventilated place. Keep container tightly closed.
P405 Store locked up.
P410+P412 Protect from sunlight. Do not expose to temperatures exceeding 50°C/122°F.
P501 Dispose of contents/ container in accordance with national regulations.

Contains propan-2-ol

2.3. Other hazards

Not applicable.

SECTION 3: Composition/information on ingredients

3.2. Mixtures

propan-2-ol **30-60%**
CAS number: 67-63-0 EC number: 200-661-7

Classification
Flam. Liq. 2 - H225
Eye Irrit. 2 - H319
STOT SE 3 - H336

ammonia, anhydrous **<1%**
CAS number: 7664-41-7 EC number: 231-635-3
M factor (Acute) = 1 M factor (Chronic) = 1

Classification
Flam. Gas 2 - H221
Acute Tox. 3 - H331
Skin Corr. 1B - H314
Eye Dam. 1 - H318
Aquatic Acute 1 - H400
Aquatic Chronic 1 - H410

The full text for all hazard statements is displayed in Section 16.

SECTION 4: First aid measures

4.1. Description of first aid measures

Inhalation Move affected person to fresh air and keep warm and at rest in a position comfortable for breathing.

99point9 HYSO Aerosol Refill

Ingestion Due to the physical nature of this product, it is unlikely that ingestion will occur.

Skin contact Rinse with water.

Eye contact Remove any contact lenses and open eyelids wide apart. Rinse with water. Continue to rinse for at least 10 minutes. Get medical attention if any discomfort continues.

4.2. Most important symptoms and effects, both acute and delayed

General information See Section 11 for additional information on health hazards.

Inhalation Avoid breathing vapour/spray.

Ingestion No harmful effects expected from quantities likely to be ingested by accident.

Skin contact Skin irritation should not occur when used as recommended.

Eye contact Vapour or spray in the eyes may cause irritation and smarting.

4.3. Indication of any immediate medical attention and special treatment needed

Notes for the doctor Treat symptomatically.

SECTION 5: Firefighting measures

5.1. Extinguishing media

Suitable extinguishing media Extinguish with foam, carbon dioxide, dry powder or water fog. Extinguish with foam, carbon dioxide, dry powder or water fog.

5.2. Special hazards arising from the substance or mixture

Specific hazards Bursting aerosol containers may be propelled from a fire at high speed.

Hazardous combustion products None known.

5.3. Advice for firefighters

Protective actions during firefighting Evacuate area. Containers close to fire should be removed or cooled with water.

Special protective equipment for firefighters Firefighter's clothing conforming to European standard EN469 (including helmets, protective boots and gloves) will provide a basic level of protection for chemical incidents.

SECTION 6: Accidental release measures

6.1. Personal precautions, protective equipment and emergency procedures

Personal precautions Avoid contact with eyes. Avoid inhalation of vapours.

6.2. Environmental precautions

Environmental precautions Avoid discharge into drains or watercourses or onto the ground.

6.3. Methods and material for containment and cleaning up

Methods for cleaning up Absorb spillage with non-combustible, absorbent material. Clear up spills immediately and dispose of waste safely.

6.4. Reference to other sections

Reference to other sections For waste disposal, see Section 13.

SECTION 7: Handling and storage

7.1. Precautions for safe handling

Safety data sheet

99point9 HYSO Aerosol Refill

Usage precautions Keep away from heat, hot surfaces, sparks, open flames and other ignition sources. No smoking. Do not spray on an open flame or other ignition source. Provide adequate ventilation.

Advice on general occupational hygiene No specific hygiene procedures recommended but good personal hygiene practices should always be observed when working with chemical products. Do not eat, drink or smoke when using this product.

7.2. Conditions for safe storage, including any incompatibilities

Storage precautions Keep out of the reach of children. Do not expose to temperatures exceeding 50°C/122°F.

7.3. Specific end use(s)

Specific end use(s) The identified uses for this product are detailed in Section 1.2.

SECTION 8: Exposure controls/Personal protection

8.1. Control parameters

Occupational exposure limits

Not known.

8.2. Exposure controls

Appropriate engineering controls Not applicable.

Eye/face protection No specific eye protection required during normal use.

Hand protection No specific hand protection recommended.

Hygiene measures Do not eat, drink or smoke when using this product. Good personal hygiene procedures should be implemented.

Respiratory protection Use only in well-ventilated areas.

SECTION 9: Physical and chemical properties

9.1. Information on basic physical and chemical properties

Appearance Aerosol.

Odour Alcoholic. Ammonia.

9.2. Other information

Other information None.

SECTION 10: Stability and reactivity

10.1. Reactivity

Reactivity There are no known reactivity hazards associated with this product.

10.2. Chemical stability

Stability Stable at normal ambient temperatures and when used as recommended.

10.3. Possibility of hazardous reactions

Possibility of hazardous reactions No potentially hazardous reactions known.

10.4. Conditions to avoid

99point9 HYSO Aerosol Refill

Conditions to avoid Pressurised container: may burst if heated Keep away from heat, sparks and open flame. Avoid heat, flames and other sources of ignition. Avoid exposure to high temperatures or direct sunlight.

10.5. Incompatible materials

Materials to avoid None known.

10.6. Hazardous decomposition products

Hazardous decomposition products No known hazardous decomposition products.

SECTION 11: Toxicological information

11.1. Information on toxicological effects

Acute toxicity - inhalation

ATE inhalation (gases ppm) 269,230.77

ATE inhalation (vapours mg/l) 1,153.85

ATE inhalation (dusts/mists mg/l) 192.31

Inhalation Vapours may cause drowsiness and dizziness.

Ingestion No harmful effects expected from quantities likely to be ingested by accident.

Skin contact Skin irritation should not occur when used as recommended. Spray will evaporate and cool rapidly and may cause frostbite or cold burns if in contact with skin.

Eye contact Irritating to eyes. Symptoms following overexposure may include the following: Severe irritation, burning, tearing and blurred vision.

SECTION 12: Ecological information

12.1. Toxicity

Toxicity No data available.

12.2. Persistence and degradability

Persistence and degradability No data available.

12.3. Bioaccumulative potential

Bioaccumulative potential No data available on bioaccumulation.

12.4. Mobility in soil

12.5. Results of PBT and vPvB assessment

Results of PBT and vPvB assessment No data available.

12.6. Other adverse effects

Other adverse effects The product contains volatile organic compounds (VOCs) which have a photochemical ozone creation potential.

SECTION 13: Disposal considerations

13.1. Waste treatment methods

General information Dispose of waste product or used containers in accordance with local regulations

Safety data sheet

99point9 HYSO Aerosol Refill

Disposal methods Dispose of surplus products and those that cannot be recycled via a licensed waste disposal contractor.

SECTION 14: Transport information

General For limited quantity packaging/limited load information, consult the relevant modal documentation using the data shown in this section.

14.1. UN number

UN No. (ADR/RID)	1950
UN No. (IMDG)	1950
UN No. (ICAO)	1950
UN No. (ADN)	1950

14.2. UN proper shipping name

Proper shipping name (ADR/RID)	AEROSOLS
Proper shipping name (IMDG)	AEROSOLS
Proper shipping name (ICAO)	AEROSOLS
Proper shipping name (ADN)	AEROSOLS

14.3. Transport hazard class(es)

ADR/RID class	2.1
ADR/RID classification code	5F
ADR/RID label	2.1
IMDG class	2.1
ICAO class/division	2.1
ADN class	2.1

Transport labels

14.4. Packing group

14.5. Environmental hazards

Environmentally hazardous substance/marine pollutant
No.

14.6. Special precautions for user

EmS	F-D, S-U
ADR transport category	2
Tunnel restriction code	(D)

14.7. Transport in bulk according to Annex II of MARPOL and the IBC Code

99point9 HYSO Aerosol Refill

Transport in bulk according to Annex II of MARPOL 73/78 and the IBC Code Not applicable.

SECTION 15: Regulatory information

15.1. Safety, health and environmental regulations/legislation specific for the substance or mixture

EU legislation
Dangerous Preparations Directive 1999/45/EC.
Dangerous Substances Directive 67/548/EEC.
Regulation (EC) No 1272/2008 of the European Parliament and of the Council of 16 December 2008 on classification, labelling and packaging of substances and mixtures (as amended).
Regulation (EC) No 1907/2006 of the European Parliament and of the Council of 18 December 2006 concerning the Registration, Evaluation, Authorisation and Restriction of Chemicals (REACH) (as amended).
Council Directive of 20 May 1975 on the approximation of the laws of the Member States relating to aerosol dispensers (75/324/EEC) (as amended).

Guidance
European Chemicals Agency www.echa.europa.eu
Workplace Exposure Limits EH40.
Supplier Safety Data Sheets

15.2. Chemical safety assessment

No chemical safety assessment has been carried out.

SECTION 16: Other information

Revision comments	This is the first issue.
Revision date	23/04/2020
Revision	1
SDS number	4648
Hazard statements in full	H221 Flammable gas. H222 Extremely flammable aerosol. H225 Highly flammable liquid and vapour. H229 Pressurised container: may burst if heated. H314 Causes severe skin burns and eye damage. H318 Causes serious eye damage. H319 Causes serious eye irritation. H331 Toxic if inhaled. H336 May cause drowsiness or dizziness. H400 Very toxic to aquatic life. H410 Very toxic to aquatic life with long lasting effects. H412 Harmful to aquatic life with long lasting effects.

This information relates only to the specific material designated and may not be valid for such material used in combination with any other materials or in any process. Such information is, to the best of the company's knowledge and belief, accurate and reliable as of the date indicated. However, no warranty, guarantee or representation is made to its accuracy, reliability or completeness. It is the user's responsibility to satisfy himself as to the suitability of such information for his own particular use.

Quick reference guide

Does HYSO 99POINT9 Quat-based formulas kill bacteria, viruses and fungi?

Yes. HYSO's formulas have been registered with the U.S. Environmental Protection Agency (EPA) and manufactured according to European Union (EU) regulations as a disinfectant that actually destroys 99.9% of certain bacteria and other germs. The EU formula is fully compliant with the Global Biocidal Products Directive, a standard that a significant number of developed and third world countries have adopted, and has been tested and approved by an EU registered toxicologist regarding safety to human health.

Does the device disinfect the entire door handle?

Yes. The Quat-based formula is non-volatile and does not evaporate from the surface, providing an extended contact kill time. The Quat leaves a very slight residue on the handle's surface – just enough that when you turn the handle, the formulation gets spread around, even underneath. The more the handle is sprayed and touched, the more effective the HYSO 99POINT9 becomes (provided, of course, that the handle is not touched with something that is so 'physically' dirty that it needs to be wiped off). Studies conducted for and approved by the EPA demonstrate that the action of the hand spreads the anti-microbial material to the underside of the handle. The quat formula provides full coverage of the entire door handle, top to bottom, side to side.

Is the Quat-based formula harmful in any way?

No. The formula is non-tainting, non-toxic and food-safe.

Will the HYSO 99POINT9 spray my hands?

No. Even though the HYSO 99POINT9 formula will not harm your skin, the device's integrated proximity sensor technology senses when anyone (or anything) over 80cms tall (the approximate height of a small 2-year-old) is near the device and prevents the device from accidentally spraying.

Does the HYSO 99POINT9 work on any type of door handle?

Yes. The HYSO 99POINT9 can be mounted on any door and any type of lever handle, knob and push plate.

Does the Quat-based formula damage door handles or push plates?

No. The formula is non-corrosive and will not remove or harm the factory finish. Tests have been carried out on a variety of metal-based handles, and no negative results were observed – no paint or finish was removed from the door handles. However, HYSO still recommends maintaining normal facility cleaning practices.

How long does a can of refill formula for the device last?

Depending on the interval setting, from 8 to 100 days.

How many batteries does the HYSO 99POINT9 use, and how long do they last?

The HYSO 99POINT9 operates on 3 AA batteries that will last approximately 8,000 sprays (between 3 months and 3 years, depending upon the interval setting).